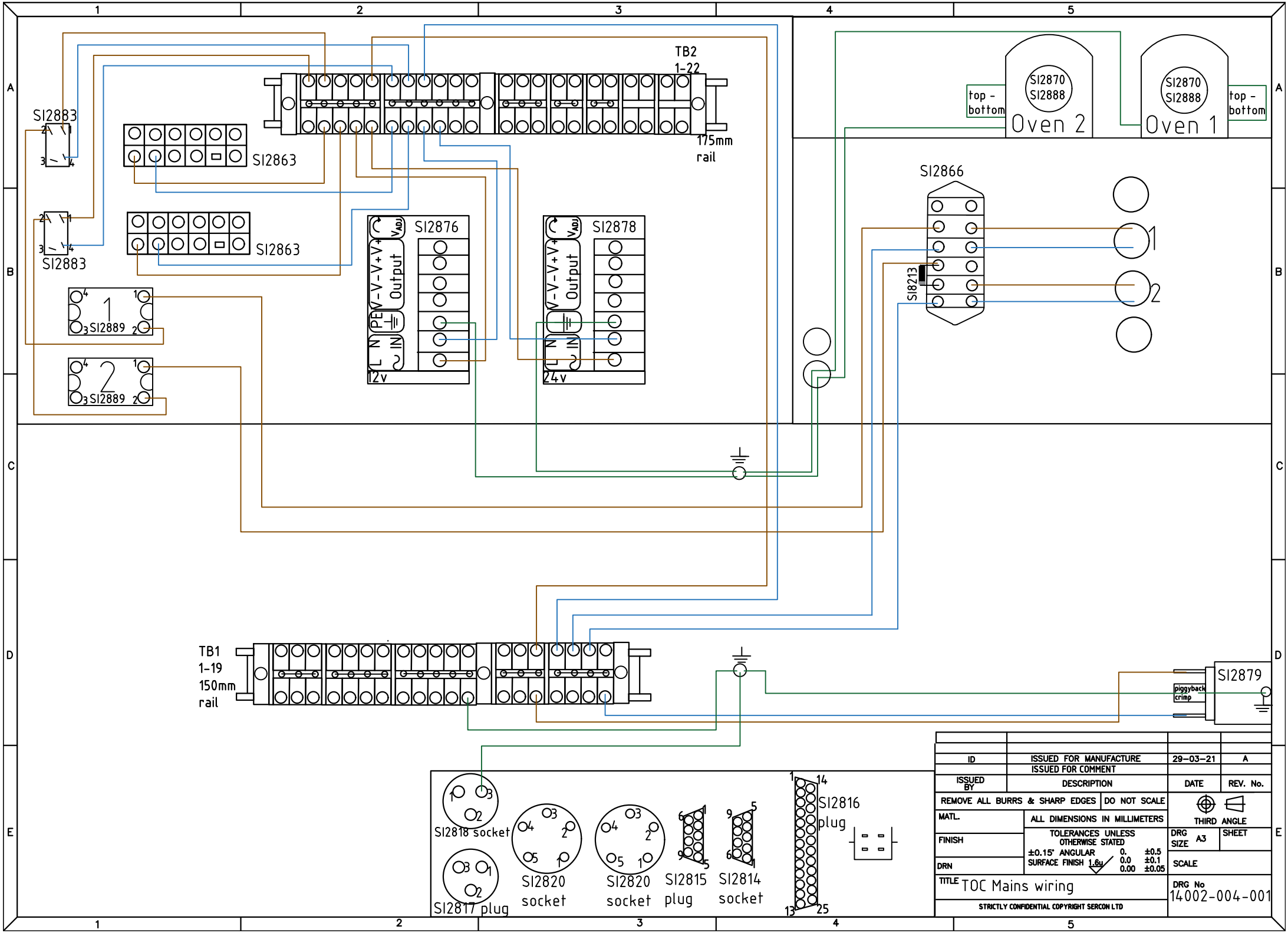

TB2
1-22
175mm
rail
SI2883
SI2863
SI2863
SI2883
SI2889
SI2889
SI2876
V-V-V+V+
Output
PE
N
L
IN
12v
SI2878
V-V-V+V+
Output
N
L
IN
24v
top - bottom
SI2870
SI2888
Oven 2
SI2870
SI2888
Oven 1
top - bottom
SI2866
SI8213
TB1
1-19
150mm
rail
SI2879
piggyback crimp
SI2818 socket
SI2817 plug
SI2820 socket
SI2820 socket
SI2815 plug
SI2814 socket
SI2816 plug
ID
ISSUED FOR MANUFACTURE
ISSUED FOR COMMENT
29-03-21
A
ISSUED BY
DESCRIPTION
DATE
REV. No.
REMOVE ALL BURRS & SHARP EDGES
DO NOT SCALE
MATL.
ALL DIMENSIONS IN MILLIMETERS
THIRD ANGLE
FINISH
TOLERANCES UNLESS OTHERWISE STATED
±0.15° ANGULAR
SURFACE FINISH 1.6u
0. ±0.5
0.0 ±0.1
0.00 ±0.05
DRG SIZE A3
SHEET
DRN
SCALE
TITLE TOC Mains wiring
DRG No 14002-004-001
STRICTLY CONFIDENTIAL COPYRIGHT SERCON LTD